Optimization and Technical Transformation for Desalting Treatment Process of Detergent Factory

Shuangchun Yang, Yi Pan, Guian Zhang, and Guobin Liu

***Abstract*—Existing process for a detergent factory of de-mineralized water system was as the main research object. According to its water quality characteristics and the investigation for original desalting process, desalting process design was made. Then test experiment was proceeded at 1.2m^3/h scale, and the system was divided into three subsystems: Pretreatment, Reverse osmosis desalting system and Electrodeionization treatment system. And stability of new craft was investigated at pilot scale, Results showed that in this craft, SID of ultra filtration effluent was less than 2, desalting ground water completely served as boiler water, and Electrodeionization meet the requirement for processes pure water after secondary treatment. But Electrodeionization effluent quality deteriorated occasionally, so Sodium hydroxide was added by metering pump before cartridge filter or was added into middle tank.**

***Index Terms*—Desalting process, test experiment, pilot scale, electrodeionization.**

I. Introduction

So far, ion exchange is core technology of desalting process in China. Mixed Bed and Compound Bed are as the main methods for desalting treatment after filter pretreatment[1]. Massive resin is a supplement to desalting treatment, meanwhile, cation bed and anion bed regenerated effluent lead to high treatment plant load. Scholars have already pay attention to environmental problem resulted from this treatment[2,3]. Membrane technology is the most potential separation technology in the twentieth century[4,5]. Initially, membrane separation technology has been used in desalting water treatment. But the reports on industrial application of integrated membrane are less[6]. Integrated membrane technology, as efficient process, is optimum combination of membrane craft. Integrated membrane process and Combined membrane process(membrane process combined with non-membrane separation process) are the best separation way in industry[7,8].In this paper Desalting water system in some detergent factory and Quality of source water on site were investigated. Process of desalting water system by integrated-membrane technology was designed, and the pilot tests were conducted.

II. Status of Desalting Water in Detergent Factory

Some detergent factory is the largest scale production base of detergent in Asia. Most production equipment adopts distributed Control System.

Manuscript received December 29, 2011; revised January 31, 2012.

Yi Pan, Shuangchun Yang, Guian Zhang and Guobin Liu are with the Liaoning Shihua University, Liaoning, China. (e-mail: panyi_bj@126.com).

A. The Current Process

Detergent factory is constituted of two devices for desalting water process: a set of brine treatment device and the other set of device. Brine treatment device provide make-up water for medium pressure boiler (System NO.1 as shown as Table I), and the other set of device provide pure water for aliphatic alcohol craft (System NO.2 as shown as Table II).

1) Production process of make-up water for boiler

The treatment capacity of System NO.1 is 150m^3/h. among them 120m^3/h are used as make-up water for boiler, and 30m^3/h are used as washing water(for anion and cation beds) and de-ionized water (to make up acid and alkali effluent). System NO.2 is pure water production device, this device provide craft pure water for aliphatic alcohol plant, the treatment capacity of this device is 10m^3/h.

The device use traditional countercurrent flow fixed bed technology and ions in bed can be regenerated. It is traditional water treatment process in the 60s, its process characteristics is downstream operation and up-flow regeneration.

TABLE I: Equipment of Medium Pressure Boiler System

Equipment	Unit mount for System NO.1	Remarks	
Tank of Primary water	1		
Pump of primary water	1		
Mechanical filter	2		One open one prepare
Cation exchanger	3	001×7strong acid resin	Two open one prepare
Middle carbon dioxide cleaner	1		
Middle water tank	1		
Middle water pump	1		
Anion exchanger	3	201×7strong alkali resin	Two open one prepare
Tank for desalting			
Pump for desalting			

note: the annual average consumption of anion and cation resin was about 10t.

2) Production process of pure water

In detergent factory, the other set is pure water treatment device, and pure water is used as craft water, this device use traditional countercurrent flow fixed bed, and ions in bed can be regenerated.

TABLE II: EQUIPMENT OF PURE WATER

equipment	number	remarks	
Tank for primary water	1		
Pump for primary water	2		
Mechanical filter	1		
Beehive filter	1		
Cation exchanger	2	001×7strong acid resin	One opening one standby
Middle carbon dioxide cleaner	1		
Middle water tank	1		
Middle water pump	2		
Anion exchanger	2	201×7strong alkali resin	One opening one standby
Strong acid and alkali mixing ion exchanger	1		
Tank for desalting	1		
Pump for desalting	2		

B. Present Evaluation

In practical operation, as for gel-type resin, it has weak shock resistance, strong washing wastage and a contaminated tendency. In order to ensure stable operation, massive resin is a supplement to this system every year. On average, annual cation resin recruitment is 5t, anion resin recruitment is 5t, the consumption of resin is 16.37 million Yuan.

Because all valves in this system are manual, the control of adding acid, adding alkali, backwashing, regeneration resort the experiences of workers. On the one hand, the water consumption of regeneration system is large, the concentration ratio of acid and alkali is uneven, the consumption of regeneration acid and alkali effluent is not accurately determined. On the other hand, the water consumption of regeneration acid and alkali effluent for up-flow regeneration craft is large(the unit consumption of acid in system is 0.725kg/t(water), the unit consumption of alkali is 0.346kg/t(water)), the practical consumption of acid is about 380t, alkali is 270t.

CODcr for regeneration effluent of cation and anion bed is 180~200mg/L, so these effluent should be treated in wastewater treatment plant. Especially, amount of ions in wastewater increased during acid and alkali regeneration process, so load of wastewater treatment plant increased.

III. MODIFICATION SCHEME

A. Modification Idea

Idea of modification scheme is as shown as Figure 1: Firstly, we integrate desalting water device with pure water device in detergent factory, how to choose subsequent processing unit is the key link of technical transformation.

Frequent regeneration and unstable regeneration ability affect the clarified water quality of desalting water. This technology has the shortage that pollution of acid and alkali and large occupied land, so in the technical transformation, this technology is not adopted. The effluent of reverse osmosis process is used as boiler water, even traditional pretreatment-reverse osmosis-reverse osmosis is used, but it cannot come up to the standard of pure water quality. If ultra filtration-reverse osmosis-reverse osmosis is used, it can come up to the standard of quality, but it cannot manufacture massive water. The water for electro deionization technology can come up to the water standard. But it set a very severe requirement on the influent quality, the water for traditional pretreatment will be used as influent water for electro deionization technology after softening treatment. Finally, the combination of ultra filtration-reverse-osmosis- electro deionization is as the key processing unit. Although investment of electro deionization technology is more than other solutions. But its operating cost is low. We can get disinvestment in some years.

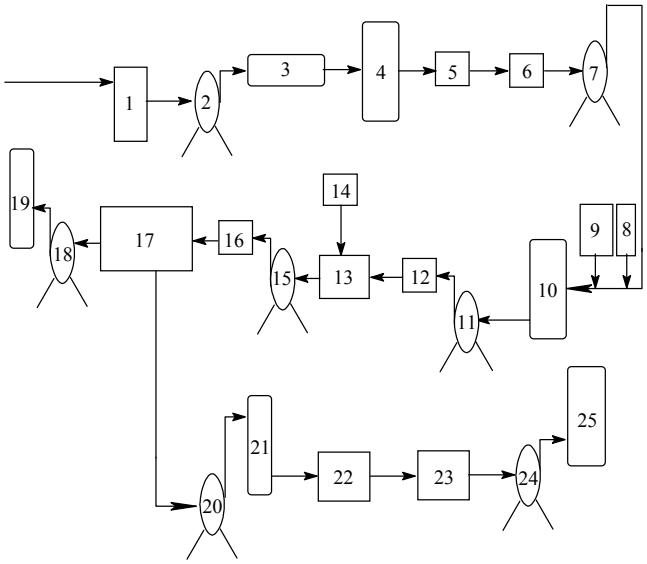

Fig. 1. Integrated Membrane Process chart.

1. tank for primary water. 2. pump for primary water. 3. heat exchanger. 4. lamination filter. 5. Ultra filtration device. 6. Ultra filtration tank. 7. Ultra filtration pump. 8. device for adding scale inhibitor. 9. device for adding reducing agent. 10. security filter. 11. primary RO high pressure pump. 12. primary reverse osmosis device. 13. middle water tank. 14. device for adding PH regulator. 15. secondary RO high pressure pump. 16. secondary reverse osmosis device. 17. tank for desalting water. 18. pump for desalting water. 19. Boiler. 20. pump for pure water. 21. security filter. 22. Electro deionization device. 23. tank for pure water. 24. pump for pure water. 25. device for fatty alcohol

B. Integrated Membrane Process Design

Explanation for process: primary water is heated by heat exchanger, then pump transport effluent to disk-lamination-filter, and large particles was removed by lamination filter, then the filtration duration is improved, the times of backwashing and chemical cleaning is reduced, the life of membrane is prolonged.

The primary water include less large particles after ultra filtration. Suspended matter, macromolecule colloid, slime, microorganism, organic compounds are departed from primary water, because these materials can blockage reverse osmosis membrane[9,10]. After effluent enter the middle water tank, microorganisms in wastewater can reproduce in the ultra filtration membrane elements. Some methods are adopted[11,12], such as a certain amount oxidant is added to the primary water in middle tank, backwashing ultra filtration filter regularly. middle pump boosted primary

water in middle tank, residual matters and organic macromolecule are departed from primary water in middle tank by security filter, then water successively enter into primary reverse osmosis pump, primary reverse osmosis membrane unit to removed dissolved salt in water.

Under some pressure, most of water molecule and other little molecule pass the reverse osmosis membrane. It become product water after collected and enter the subsequent equipment by water production pipeline, most of salt, colloid and organic compounds in water cannot pass the reverse osmosis membrane. It remains in a spot of concentrated water and is discharged by concentrated water pipe.

Insoluble salts such as calcium carbonate, magnesium carbonate, calcium sulfate will scale after concentrating and block the reverse osmosis membrane. So scale inhibitor is added to the influent of reverse osmosis membrane. In order to prevent subsequent reverse osmosis membrane, sodium bisulfate is added to the influent of Reverse osmosis (RO) system, sodium bisulfate is used to reduce oxidant in water.

In order to meet the standards of craft water for detergent, desalting water of reverse osmosis device is further treated by electro deionization technology, electro deionization process regeneration do not use reagent, resin regeneration use H^+ and OH^- which from water ionization.

C. Equipment for Medium Test

1) Steam Heater

Viscosity is enhanced at a lower temperature of water, groundwater temperature of detergent factory is 5~25℃, which lead to a lower Reverse osmosis water production. So system regulate temperature of primary water by steam heater, to guarantee reverse osmosis system could still be normal operation.

Primary water is situation for Medium test: water quantity: 1.2m^3/h; temperature: minimum 5~25℃;

Situation for effluent: water quantity: 0.82m3/h, outlet water temperature: 25℃.

2) Disk-Lamination-Filter

Disk-lamination-filter is constitution of plenty of plastic platters, which are compressed mutually and incising groove in surface. To realize filtration, backwashing, automatic switching and cycle operation.

Filter grade of disk-lamination-filter: 100μm; single branch treatment 0.6m^3/h; working pressure 0.6Mpa; working temperature 5~35℃; pH value 4~12.

Backwashing system: source of backwashing: RO concentrated water; pressure in backwashing process: 0.3Mpa; flow and time in backwashing might regulate.

3) Ultra filtration Eequipments

According to water production requirements, ultra filtration equipment is component in parallel.

a. Dosage should be made fully mixing 15 to 20 minutes.

b. Adding medical chest should be routinely clean to avoid bacterial growth.

Reverse osmosis membrane group processing, the rate of single membrane removing salt reached 99.7%. The handling capacity of reverse osmosis system was 1.1 m^3 /h and effluent water conductivity was below 7 μ S/cm.

Reverse osmosis system was an important part of the project, inlet requirements are as shown as Table III.

TABLE III: REVERSE OSMOSIS MEMBRANE WATER REQUIREMENTS

Highest inlet water temperature	45℃
Scope of pH	3～10
Highest operating pressure	4.16MPa
Highest pressure loss of membrane component	0.07MPa
The highest SDI of inlet water(15 minutes)	＜5
The highest concentration of free chlorine	＜0.1ppm
The highest turbid degree of inlet water	1.0NTU
Optimum recovery rate of membrane component	15%

Working Pressure of reverse osmosis device was 1.1~1.5MPa, optimum working water temperature was 25℃, water production was 0.6m^3/h, recovery rate of water below 70%,pH of inlet water was 5~9.

4) Electrodeionization

Electrodeionization was the pledge of water quality in water purification system, operation parameters of its inlet water quality and membrane modules was presented as shown as Table IV and Table V below.

TABLE IV: THE DEMANDS OF THE PLEDGE OF INLET WATER FOR EDI MEMBRANE MODULES

Parameters	Units	Effluent water conductivity
TEA(the total exchangeable anion)	mg/L	<2
Conductivity	μS/cm	≤8
ph		6.5～9
Hardness	mg/L($CaCO_3$)	＜0.5
CO_2	mg/L	＜3
SiO_2	mg/L	＜0.3
TOC	mg/L	＜0.3
Cl_2	mg/L	＜0.05
SDI		＜0.05
Oil or grease	mg/L	-
Turbid degree	NTU	＜1.0
Oxidants	mg/L	-

TABLE V: OPERATING PARAMETER OF ELECTRODEIONIZATION DEVICES

Parameters	Range
Freshwater flow	0.41～0.57m^3/h
Inlet water temperature	13～30℃
Inlet pressure	≤0.35MPa
Pressure difference between inlet and outlet water	0.1～0.2MPa
Recovery rate of wastewater	80～95%
Voltage of device(per membrane modules)	the highest was 110V

As the assurance cell of this treatment system two stage demineralization, we selected the Electrodeionization membrane module of U.S. and European. Electrodeionization membrane module: amount 1; recovery rate of water 80~95%; the output voltage of transformer was tunable.

IV. ANALYSIS OF TEST RESULTS

A. Pretreatment Equipments

Washing raw water pipe and disc type filter until effluent water was transparent without sundry; flushing pipe for UF-RO, which appealed to effluent water was transparent

without sundry. Some figure result of water quality in service was given in Table VI.

TABLE VI: EFFLUENT WATER QUALITY FOR PRETREATMENT

Time	UF inlet water		UF effluent water		
	Pressure,MPa	Flow,t/h	Pressure, MPa	SDI	Turbid degree,NUT
9:30	0.28	0.48	0.20	1.5	-
10:00	0.30	0.5	0.21	1.2	＜1.0
10:30	0.30	0.5	0.21	1.0	＜1.0

As apparent from the figures, disc type filter and ultra filtration equipment fully have guaranteed the demand for inlet water quality of primary demineralization system, meanwhile, we monitored of the variation for pretreatment water COD_{Mn}（as shown as Fig.2）, internal and external pressure difference between ultra filtration membrane and membrane flux（as shown as Fig.3）. With the experiment continuous running 100 min with constant flow, we found the COD_{Mn} removal rate for effluent water maintain 8~15%. After some time, the ultra filtration operation is stable, then membrane flux become constant. The pressure difference of ultra filtration membrane was in normal range but it had the rising trend.

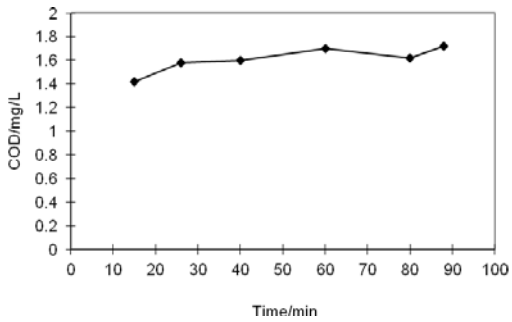

Fig. 2. The change of effluent water quality for pretreatment ultra filtration.

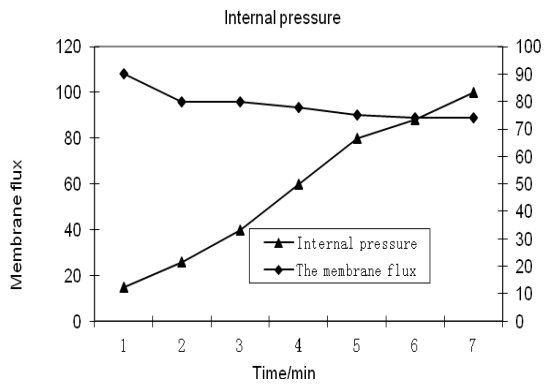

Fig. 3. Internal and external pressure difference and the change of membrane flux.

B. RO

Reverse Osmosis(RO) experiment contain debugging redundant adding unit, scale inhibitor dosing device, cartridge filter, RO device. As shown as Table VII test results showed that RO effluent water can absolutely contented the demand of water quality for boiler feed water and RO effluent water flow guaranteed the inlet water of EDI system. However, membrane pollution problems were unavoidable in RO membrane operational process, so we need study continuous running of membrane integrated system. It was studied next step that long time running effects and membrane cleaning.

TABLE VII: SOME FIGURE FOR REVERSE OSMOSIS(RO) EFFLUENT WATER

Time	Reverse osmosis inlet water			Reverse osmosis effluent water	
	Temperature, ℃	Conductivity , μS/cm	Ph	Flow , t/h	Conductivity , μS/cm
10:25	9.0	262	8.07	0.51	4.2
10:42	9.6	259	8.1	0.54	3.5
10:55	9.8	264	8.08	0.55	2.9
11:30	10	268	8.02	0.55	2.1
12:30	10	264	8.06	0.58	1.6

C. Electrodeionization Unit

Electrodeionization unit feed water was RO effluent water. In order to prevent secondary pollution, it was awfully necessary that guaranteeing that middle water tank was clean and bacterial, testing time for 24 hours straight. Due to Electrodeionization was main object of investigation, as shown as Table VIII we investigated operating voltage, producing water resistivity and effluent quality.

TABLE VIII: SOME FIGURE FOR EDI EFFLUENT WATER

Time	Effluent flow,t/h	Resistivity of effluent MΩ·cm	Output voltage V
11:00	0.35	5.1	60
12:00	0.38	5.9	61
14:00	0.48	7.3	65
Next day 10:00	0.49	9.7	64
14:00	0.56	10.1	65

It had close relationship between the resistivity of Electrodeionization producing water and control voltage. When control voltage was very small, electro dialysis water dissociation was faint, resin relay on the absorption of itself on ion exchange role. However, when voltage was too low, ion migration velocity exceed exchange rate, then the resistivity of producing water was lower. With increased voltage, the hydrolysis degree increase, resin regeneration and restore the adsorption ability for part of the failure resin and producing water resistivity was rising. When voltage increased to a certain range, producing water resistivity had tended to stable. These showed that it achieved balance that ion exchange process with the resin electricity regeneration process. When control voltage was too higher. It can cause excessive hydrolysis and ion reverse diffusion, producing water resistivity reduced on the contrary. So in the experiment, we carried out Electrodeionization membrane stack experiment under 25V, 65V, 85V regeneration voltage, it was better that ion exchange resin regeneration effect under 65V, membrane stack can attain stable state after it ran 5 min. However, with 25V voltage for regeneration, along with the growth of time for the regeneration, producing water resistivity decreased on the contrary. These showed that regeneration voltage in 25V was not enough to

completely move from the freshwater ventricle, the electricity regeneration rate fell behind the ion exchange rate, resin was gradually saturating. However, producing water resistivity increased with the extension of time when the regeneration voltage was 25V, just its resistivity was smaller than the producing resistivity when the regeneration voltage was 65V. Test result was that Electrodeionization producing water can completely meet the requirement for quality of the freshwater in industry.

V. Conclusions

The result showed that the underground water desalted as for adder water is suitable for boiler water, which can meet the requirement. And pure water after Electrodeionization second treatment is suitable for process water. The problems that we need notice were summarized as follows:

1) Usually inlet water quality for every device needs to be controlled. Material of UF membrane was PVDF (resistant to pollution), but when primary water quality was worsen, we had to timely adjust running pattern, and reduce the backwashing interval for UF.
2) The effluent quality for second demineralization system completely met the requirement, but the case appeared that Electrodeionization effluent quality decreased. Sodium hydroxide was suggested to add by metering pump in front of the security filter or was added to the middle tank.
3) More than twenty large and medium-sized industrial and mining enterprises located there, wastewater in industry was mainly from ground surface. At exhausted water season, it only reached 60% of water resource quantity under normal condition. So, de mineralize system will be effected.

References

[1] Xiaobin Ji, Feng Li, "Problems and Solutions in Operation of Reverse Osmosis System," *Water Purification Technology*. Vol. 30, No.5, pp.61-63, October 2011.

[2] Kah Peng Lee, Tom C. Arnot, Davide Mattia, A review of reverse osmosis membrane materials for desalination-Development to date and future potential, *Journal of Membrane Science,* Vol 370, No.1, 15 pp. 1-22, March 2011

[3] Cuiling Dong, Hongbin Liu, and Dawei Jing, Different Fouling Mechanisms of Hollow Fiber Membrane Bioreactor and Flat Sheet Membrane Bioreactor, *Journal of Tianjin University*, Vol. 42, No.11,pp.1028-1012, November 2009.

[4] Toshikatsu Sata, Studies on ion exchange membranes with permselectivity for specific ions in electrodialysis Original Research Article,*Journal of Membrane Science*, Vol. 93, No.2,pp. 117-135, August 1994

[5] Qingji Wang, Shuyan Zhang, Hao Wang, etal, "Membrane Integrated Techonogy Pilot Test for Desalination," *Guangdong Chemical.* Vol. 37, pp. 140-141, April 2010.

[6] Fu Liu, N. Awanis Hashim, Yutie Liu, etal,Progress in the production and modification of PVDF membranes Review Article, *Journal of Membrane Science,* Vol. 375, No.1–2, pp. 1-27, June 2011

[7] Toshikatsu Sata, Tomoaki Sata, Wongkang Yang, Studies on cation-exchange membranes having permselectivity between cations in electrodialysis Original Research Article,*Journal of Membrane Science*, Vol. 206, No.1–2,pp,31-60, August 2002

[8] Xing Yang, Rong Wang, Lei Shi etal,Performance improvement of PVDF hollow fiber-based membrane distillation process, *Journal of Membrane Science,* Vol. 369, NO. 1–2, pp437-447: March 2011.

[9] Tong Zhu, Wang Yunde, Xie Yuanhua, et al. The mechanism of membrane fouling on submerged flat membrane MBR treating of domestic wastewater. *Research of Environmental Sciences*, Vol. 20, No. 2 ,pp.41-45,January 2007.

[10] Shenxu Bao, Yimin Zhang, and Xiaotao Ding, "Research on the High-salt Water Desalination by Batch Recirculation Electrodialysis," *Technology of Wuhan University*. Vol. 32, No. 5, pp. 84-87, March 2010.

[11] Diana J Hellman, Alan R Greenberg, William B Krantz etal, A novel process for membrane fabrication: thermally assisted evaporative phase separation (TAEPS) *Journal of Membrane Science*, Vol. 230, , No. 1–2, pp. 99-109,15 February 2004

[12] V.A. Shaposhnik, N.N. Zubets, I.P. Strygina, et al. High emineralization of drinking water by electrodi-alysis without scaling on the membranes *Desalination,* Vol.145, No. 1, pp, 329-332, September 2002

Dr. Shuangchun Yang is a lecture in Liaoning Shihua University. She got Ph.D. Degree on chemical and environmental technology in China University of Petroleum in 2010. Her research is on green chemistry, wastewater treatment and waste management. Her Ph.D. thesis is on "The Study on the Pollutants Composition and Biodegradability in Dry-Spinning Acrylic Fibers Wastewater".

She joined projects as the participator in the recent three years as follow, The research on preparation and application of the calcium sulfate whiskers(National science and technology department "863" projects,2003AA33X130) and National Natural Science Foundation of China (NSFC, Grant No. 20876175)

Her papers published recently are as follow, Review on Treatment for Dry-spun Fibers Wastewater(Synthetic Fiber in China,2010) , Review on the Membrane Gradient Separation for Water Quality Analysis(Chemical industry and Engineering progress)

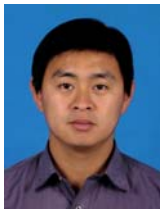

Dr. Yi. Pan received the Ph.D. Degree in Petroleum Engineering from China University of Petroleum in 2011, the M.E. Degree in Geophysics and Information from China University of Petroleum in 2007, the B.E. in Computer application from Liaoning Shihua University in 2000, and his current research involves Real-Time Monitoring, Heavy Oil Production, Oil Shale, and Reservoir Simulation. Presently he is working in Liaoning Shihua University as a teacher. He has co-authored more than 20 papers in academic journals and international conference and is member of Society of Petroleum Engineers and IEEE member.

Guobin Liu was born in Chaoyang of Liaoning Province in China in 1992. He is now taking his undergraduate courses in environmental engineering at Liaoning Shihua University from 2009.

Gui'an Zhang was born in Suzhou of Anhui Province in China in 1986. He is now taking his undergraduate courses in environmental engineering at Liaoning Shihua University from 2009.